1.

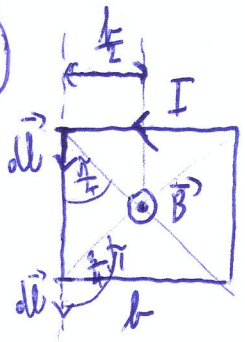

1b

- použijem Biot-Savartov zákon:

$$\vec{B} = \frac{\mu_0 I}{4\pi} \int \frac{d\vec{l} \times \vec{r}}{|\vec{r}|^3}$$

- zoberiem príspevky od strán štvorca: $|\vec{B}| = 4|\vec{B}'|$

$$B' = \frac{\mu_0 I}{4\pi} \int \frac{dl\, r \sin\alpha}{r^3} = \frac{\mu_0 I}{4\pi} \int \frac{dl \sin\alpha}{r^2}$$ 1b

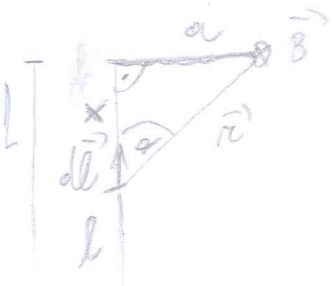

$$\operatorname{tg}\alpha = \frac{a}{x} = \frac{a}{L-l} \Rightarrow L - l = \frac{a}{\operatorname{tg}\alpha}$$

$$l = L - \frac{a}{\operatorname{tg}\alpha} = L - a\frac{\cos\alpha}{\sin\alpha}$$

$$dl = -a\,\frac{(-\sin\alpha)\cdot\sin\alpha - \cos\alpha\cdot\cos\alpha}{\sin^2\alpha}\,d\alpha$$

1b $$dl = a\,\frac{\sin^2\alpha + \cos^2\alpha}{\sin^2\alpha} = \frac{a}{\sin^2\alpha}\,d\alpha$$

1b $$\sin\alpha = \frac{a}{r} \Rightarrow r = \frac{a}{\sin\alpha}$$

$$B' = \frac{\mu_0 I}{4\pi} \int \frac{a}{\cancel{\sin^2\alpha}}\,d\alpha \cdot \sin\alpha\, \frac{\cancel{\sin^2\alpha}}{a^2} = \frac{\mu_0 I}{4\pi a} \int \sin\alpha\, d\alpha$$

$$B' = \frac{\mu_0 I}{2\cdot 4\pi \frac{b}{2}} \int_{\frac{\pi}{4}}^{\frac{3}{4}\pi} \sin\alpha\, d\alpha = \frac{\mu_0 I}{2\pi b}\left[-\cos\alpha\right]_{\frac{\pi}{4}}^{\frac{3}{4}\pi} = \frac{\mu_0 I}{2\pi b}\left[\frac{\sqrt{2}}{2} + \frac{\sqrt{2}}{2}\right] = \frac{\mu_0 I}{\pi b}\,\frac{\sqrt{2}}{2}$$ 1b

$$B = 4B' = 2\sqrt{2}\,\frac{\mu_0 I}{\pi b}$$ 1b

$\boxed{6b}$

2.

a)

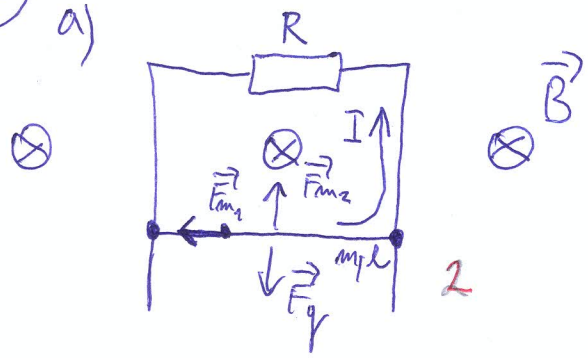

2

$\vec{F}_{m_1}$ – magnetická sila na pohybujúci sa náboj

$\vec{F}_{m_2}$ – mag. sila na vodič s prúdom

b) $|u_i| = \frac{dQ}{dt} = \frac{B\,dS}{dt} = \frac{B \cdot l \cdot dx}{dt} = \frac{B l v \cdot \cancel{dt}}{\cancel{dt}} = \boxed{B l v}$ 1

c) $|\vec{F}_{m_2}| = |\vec{F}_g|$ 1 , $\vec{F}_{m_2} = I\,\vec{l} \times \vec{B}$ 1

$I l B = m g$, $I = \frac{u}{R} = \frac{B l v}{R}$ 0,5

$\frac{B l v}{R} l B = m g$

$$\boxed{v = \frac{m g R}{(B l)^2}}$$ 0,5

6b

③ $g = 9{,}81\ m\,s^{-1}$

$R = 6378\ km$

$\varkappa = 6{,}67 \cdot 10^{-11}\ m^3 kg^{-1} s^{-2}$

$R_{ZS} = 149{,}6 \cdot 10^6\ km$

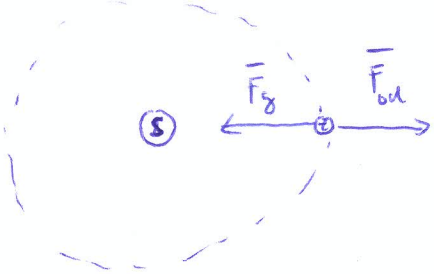

$T = 365$ dní $=$
$= 8760\,h =$ 1
$= 31\,536\,000\ s$

a) $\varkappa \dfrac{M_Z \cancel{m}}{R^2} = \cancel{m} g$ 1

$\varkappa \dfrac{M_Z}{R^2} = g$

$M_Z = \dfrac{g R^2}{\varkappa}$ 0,5

$M_Z = \dfrac{9{,}81 \cdot (6378 \cdot 10^3)^2}{6{,}67 \cdot 10^{-11}}$

$M_Z = 5{,}98 \cdot 10^{24}\ kg$ 0,5

$\boxed{5b}$

b) $|\bar{F}_g| = |\bar{F}_{od}|$

$\varkappa \dfrac{M_S \cancel{M_Z}}{R_{ZS}^2} = \cancel{M_Z} \omega^2 R_{ZS}$ 1

$\varkappa \dfrac{M_S}{R_{ZS}^2} = \left(\dfrac{2\pi}{T}\right)^2 R_{ZS}$

$M_S = \left(\dfrac{2\pi}{T}\right)^2 \dfrac{R_{ZS}^3}{\varkappa}$ 0,5

$M_S = \left(\dfrac{2\pi}{31\,536\,000}\right)^2 \dfrac{(149{,}6 \cdot 10^9)^3}{6{,}67 \cdot 10^{-11}}$

$M_S = 1{,}99 \cdot 10^{30}\ kg$ 0,5

④

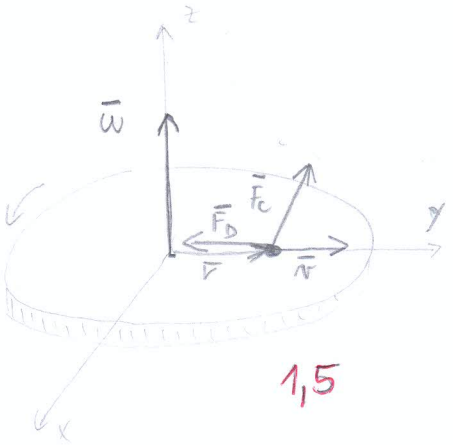

1,5

OTEC

Coriolisova: $\bar{F}_c = (2\,\bar{\omega} \times \bar{v})\,m$

Dostředivá: $\bar{F}_D = (-\omega^2 \bar{r})\,m$

VY: 0,5 0,5

Coriolisova: $\bar{F}_c = (-2\,\bar{\omega} \times \bar{v})\,m$ 0,5

odstředivá: $\bar{F}_D = (\omega^2 \bar{r})\,m$

0,5 0,5 2,5

$\boxed{4b}$

(5) $p_1 = 10^5\ Pa$

$V_1 = 1\ dm^3 = 10^{-3}\ m^3$

$Q = 5\ J$

$C_v = 16{,}62\ J\,mol^{-1}K^{-1}$

Plyn vykoná většinu práce až expanduje izotermicky. 1

$Q = \Delta U + W$ až $T = konst$ $Q = W_T$

až $p = konst$ $W_p = Q - \Delta U$ 1

DŮKAZ: 4

a) T: $Q = \Delta U + W$ ($\Delta U \to n C_v \Delta T = 0$, $\Delta T \to 0$)

$Q = W_T = \boxed{5\ J}$

p: $pV = nRT$

$p\,dV = nR\,dT$

$dT = \frac{p\,dV}{nR}$

$$p:\ Q = \Delta U + W_p = \int_{V_1}^{V_2} n C_v\,dT + \int_{V_1}^{V_2} p\,dV = \int_{V_1}^{V_2} \frac{p}{nR} n C_v\,dV + \int_{V_1}^{V_2} p\,dV =$$

$$= \left(\frac{p_1 C_v}{R} + p_1\right)\int_{V_1}^{V_2} dV = p_1\left(\frac{C_v}{R}+1\right)(V_2 - V_1) = Q$$

$$(V_2 - V_1) = \frac{Q}{p_1\left(\frac{C_v}{R}+1\right)} = \frac{5}{10^5\left(\frac{16{,}62}{8{,}31}+1\right)} = 1{,}6\cdot 10^{-5}\ m^3$$

$$W_p = p_1\int_{V_1}^{V_2} dV = p_1(V_2 - V_1) = 10^5 \cdot 1{,}6\cdot 10^{-5} = \boxed{1{,}67\ J}$$

b)

$dQ = dU + dW$

- $dT = 0 \to dQ = dW_T$
- $dp = 0 \to dW_p = dQ - dU$

$dW_p < dW_T$ až $dU > 0$

$dU = n C_v\,dT$

$\downarrow\ \downarrow\ \downarrow$

$+\ +\ ?$

$pV = nRT$

$p\,dV = nR\,dT$ → kladné ⇒ $dU > 0$

$\parallel$

až koná práci kladné

c) tvorivosti se medze nekladú...

66